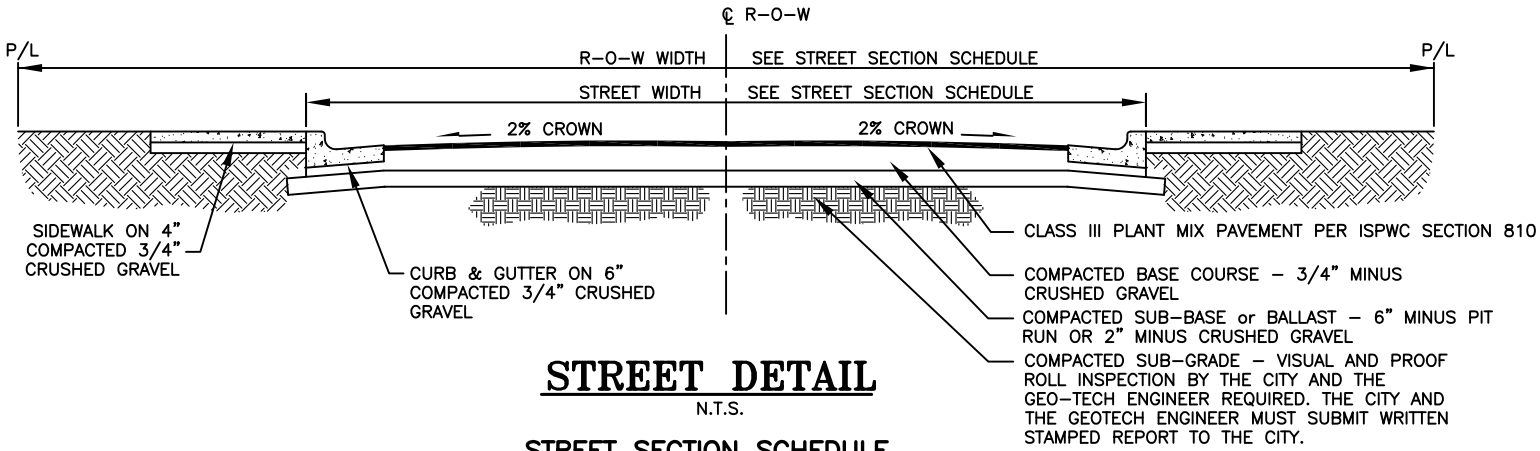

STREET DETAIL

N.T.S.

STREET SECTION SCHEDULE

DETAIL	STREET DESIGNATION	SUB-BASE or BALLAST	BASE COURSE	PLANT MIX PAVEMENT	*CURB TYPE	SIDEWALK WIDTH (MIN.)	STREET WIDTH	RIGHT-OF-WAY WIDTH
R-810E	RESIDENTIAL	8"	2"	2.5"	ROLLED	5'-0"	37'-0" TBC TO TBC	53'-0"
R-810D	INDUSTRIAL	12"	4"	3"	ROLLED	5'-0"	52'-0" TBC TO TBC	70'-0"
R-810C	COLLECTOR	11"	4"	3"	VERTICAL	7.0' ATTACHED/ 5.0' DETACHED	46'-0" TBC TO TBC	70-0"
R-810B	MINOR ARTERIAL	12"	4"	3"	VERTICAL	7.0' ATTACHED/ 5.0' DETACHED	49'-0" TBC TO TBC	80'-0"
R-810A	PRINCIPAL ARTERIAL	12"	4"	3"	VERTICAL	7.0' ATTACHED/ 5.0' DETACHED	70'-0" TBC TO TBC	96'-0"
	ALL WEATHER STREET SECTION	8"	2"	0"	NONE	NONE	20'-0" EDGE TO EDGE	VARIES

NOTES:

1. STREET STRUCTURE SECTIONS LISTED ARE **MINIMUMS** AND MAY VARY DEPENDING UPON SITE SPECIFIC SOIL CONDITIONS. A ROADWAY SECTION DESIGN INCLUDING SITE GEOTECHNICAL INFORMATION PREPARED BY A REGISTERED PROFESSIONAL ENGINEER, SHALL BE SUBMITTED FOR REVIEW AND APPROVAL BY THE CITY.
2. STREET AND RIGHT-OF-WAY WIDTHS LISTED ARE **MINIMUMS**. ADDITIONAL STREET AND RIGHT-OF-WAY WIDTHS MAY BE REQUIRED BY THE CITY ENGINEER.
3. ROLLED CURB & GUTTER: SHALL BE CONSTRUCTED PER CALDWELL STANDARD DRAWING C-702 WITH THE REQUIREMENT OF 6" OF COMPACTED 3/4" CRUSHED GRAVEL UNDERNEATH.
4. VERTICAL CURB & GUTTER: SHALL BE CONSTRUCTED PER CALDWELL STANDARD DRAWING C-701 WITH THE REQUIREMENT OF 6" OF COMPACTED 3/4" CRUSHED GRAVEL UNDERNEATH.
5. SIDEWALK: SHALL BE CONSTRUCTED PER CALDWELL STANDARD DRAWING C-709 WITH THE REQUIREMENT OF 4" OF COMPACTED 3/4" CRUSHED GRAVEL UNDERNEATH. WIDER WIDTHS MAY BE REQUIRED.
6. BASE, SUB-BASE AND SUBGRADE COMPACTION SHALL COMPLY WITH ISPWC SECTION 202.

CITY OF CALDWELL IDAHO
Home To Other

DATE: 9-23-14
SCALE: AS SHOWN

STANDARD STREET DETAIL

STANDARD DRAWING NO.
R-810

H:\Drawings\City Standards\R-810.dwg

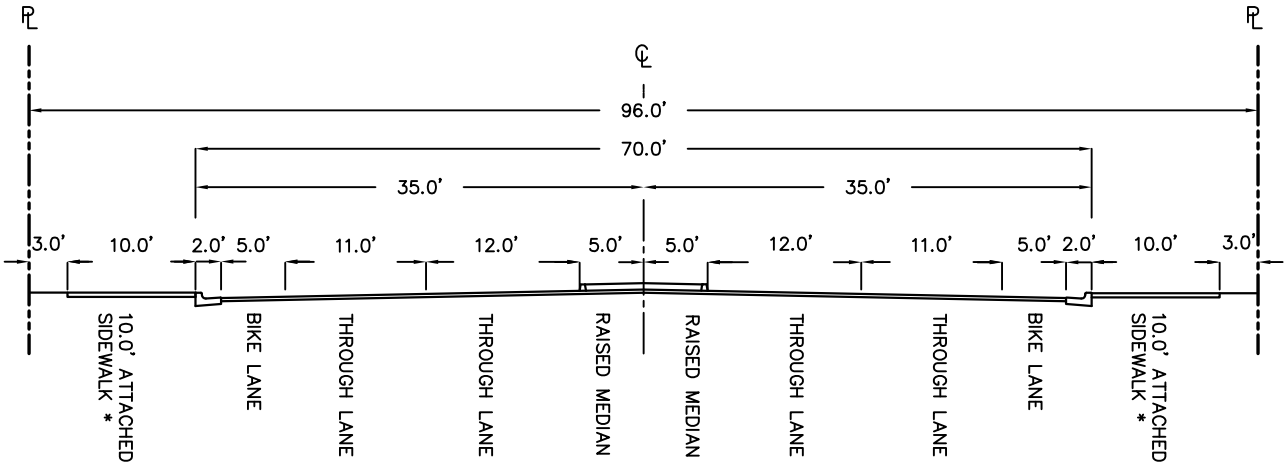

R–810A
N.T.S.
(PRINCIPAL ARTERIAL #1)

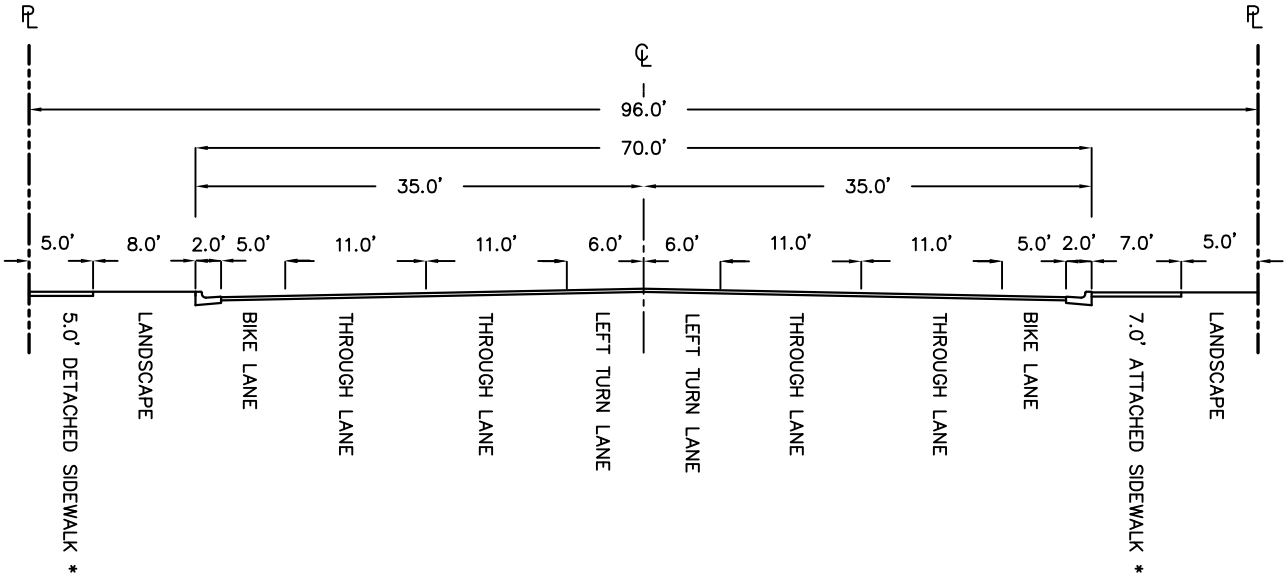

R–810A
N.T.S.
(PRINCIPAL ARTERIAL #2)

* SIDEWALKS

– THE DEVELOPER MAY CHOSE TO CONSTRUCT A 7.0' ATTACHED SIDEWALK OR A 5.0' DETAHED SIDEWALK (UNLESS OTHERWISE DIRECTED BY THE CITY).

– SOME PRINCIPAL ARTERIAL LOCATIONS WILL REQUIRE 10.0' SIDEWALKS PER CITY DIRECTIVE.

DATE: 9/10/15	STANDARD STREET SECTION	STANDARD DRAWING NO.
SCALE: AS SHOWN	PRINCIPAL ARTERIAL	R-810 A

H:\Drawings\City Standards\R–810 A.dwg

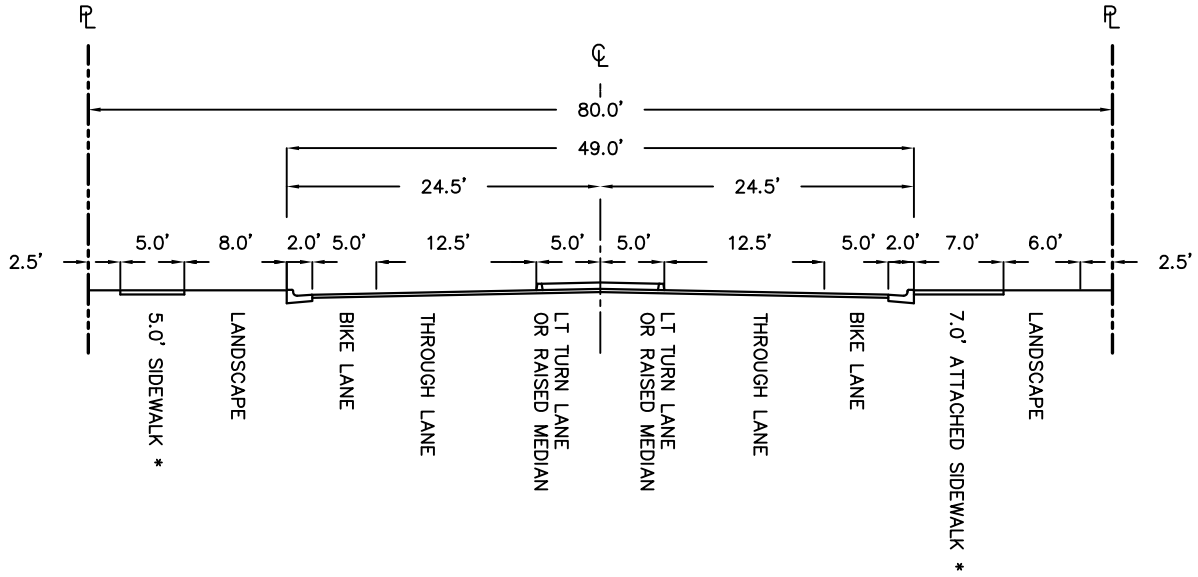

R–810B
N.T.S.
(MINOR ARTERIAL #1)

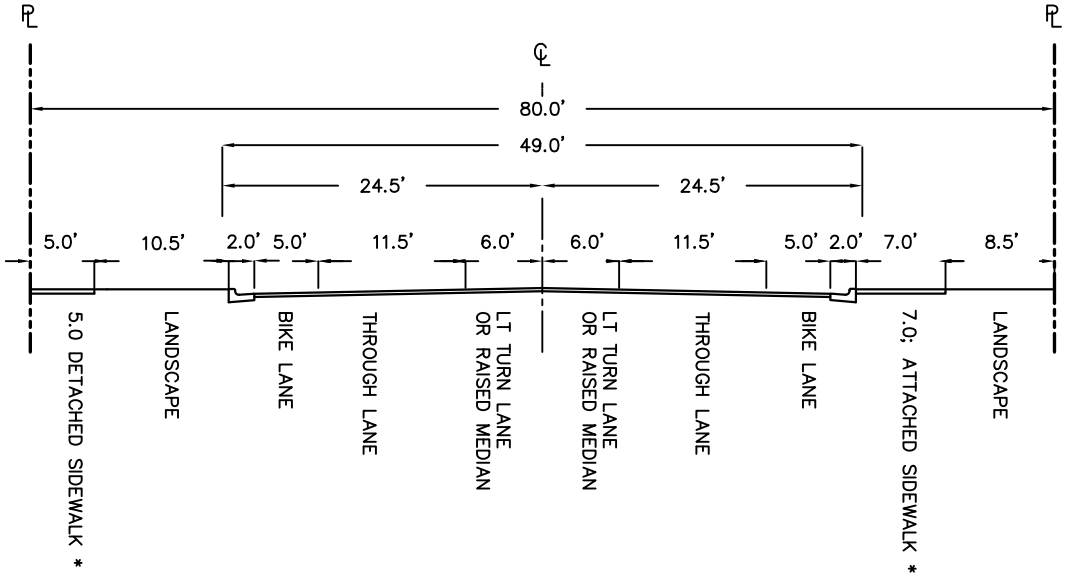

R–810B
N.T.S.
(MINOR ARTERIAL #2)

* SIDEWALKS

– THE DEVELOPER MAY CHOSE TO CONSTRUCT A 7.0' ATTACHED SIDEWALK OR A 5.0' DETAHED SIDEWALK (UNLESS OTHERWISE DIRECTED BY THE CITY).

– SOME MINOR ARTERIAL LOCATIONS WILL REQUIRE 10.0' SIDEWALKS PER CITY DIRECTIVE.

DATE: 9/15/2015	STANDARD STREET/SECTION	STANDARD DRAWING NO.
SCALE: AS SHOWN	MINOR ARTERIAL	R-810 B

H:\Drawings\City Standards\R–810 B.dwg

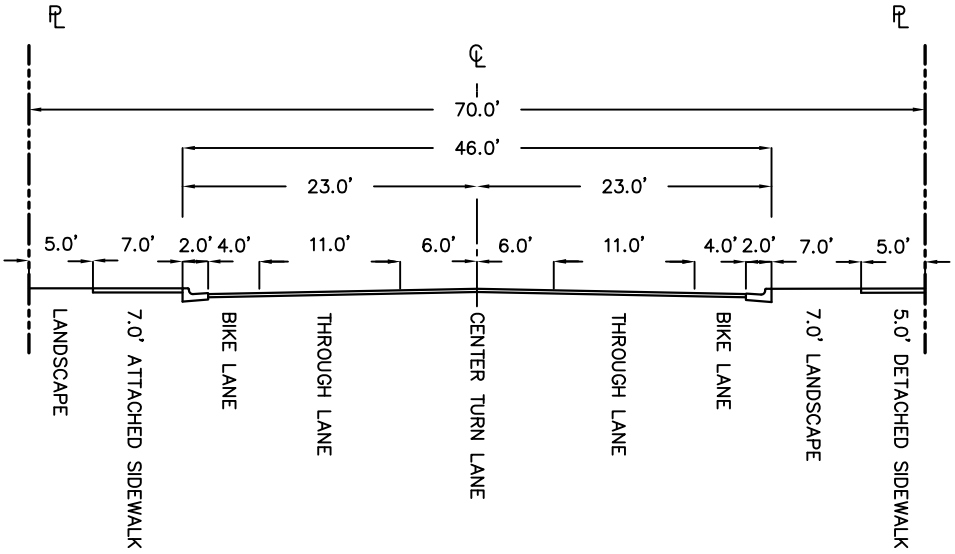

R–810C
(COLLECTOR)
N.T.S.

NOTE:
1. TURN LANE MAY BE ADDED AT INTERSECTIONS.
2. THE DEVELOPER MAY CHOSE TO CONSTRUCT A 7.0' ATTACHED SIDEWALK OR A 5.0' DETACHED SIDEWALK (UNLESS OTHERWISE DIRECTED BY THE CITY).

DATE: 9/15/2015	STANDARD STREET SECTION	STANDARD DRAWING NO.
SCALE: AS SHOWN	COLLECTOR	R-810 C

H:\Drawings\City Standards\R–810 C.dwg

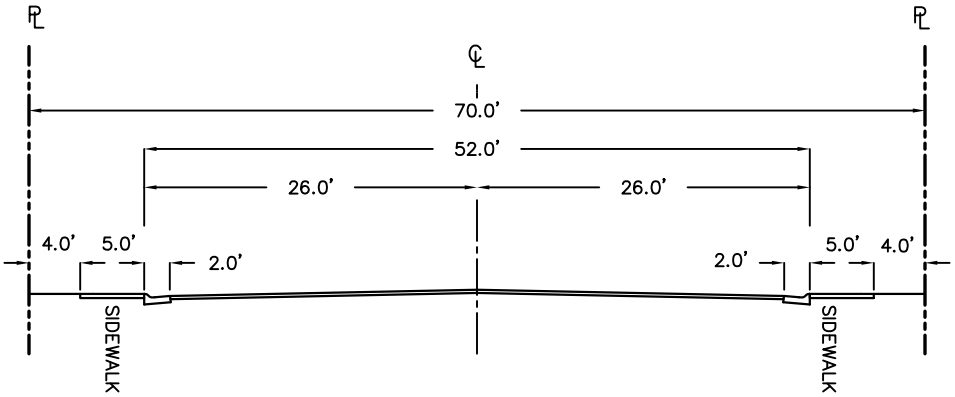

R-810D
N.T.S.
(INDUSTRIAL)

DATE: 4/19/2018	STANDARD STREET SECTION		STANDARD DRAWING NO.
SCALE: AS SHOWN	INDUSTRIAL/RESIDENTIAL		R-810 D

H:\Drawings\City Standards\R-810 D.dwg

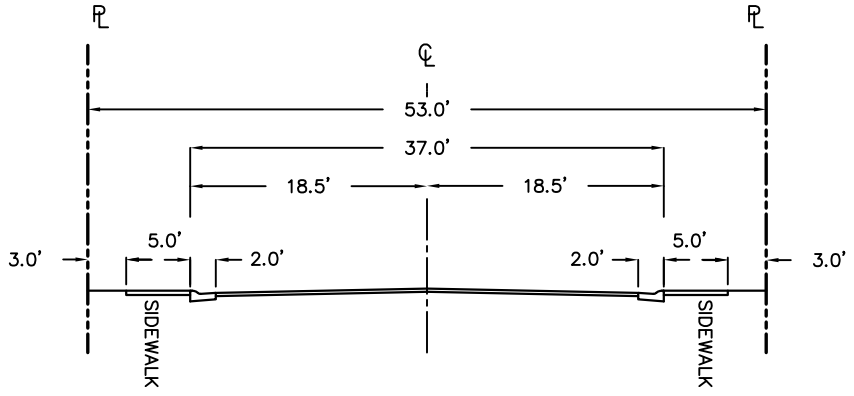

R–810E–1
N.T.S.
(RESIDENTIAL)

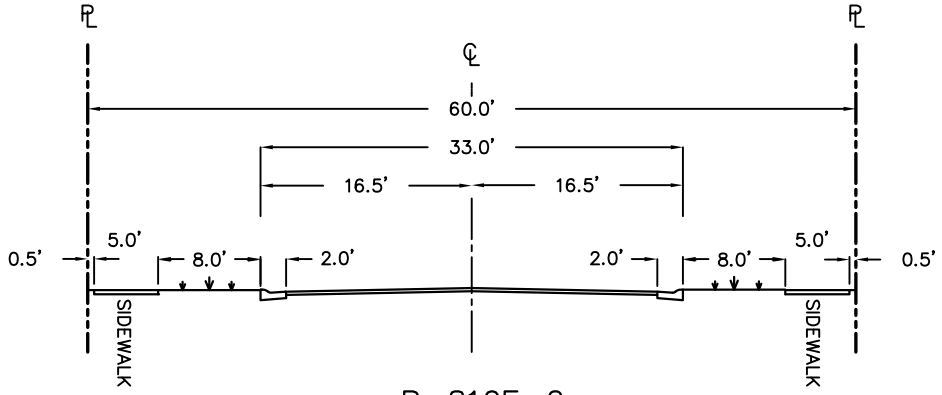

R–810E–2
N.T.S.
(RESIDENTIAL R–1,
RS–1, RS–2)

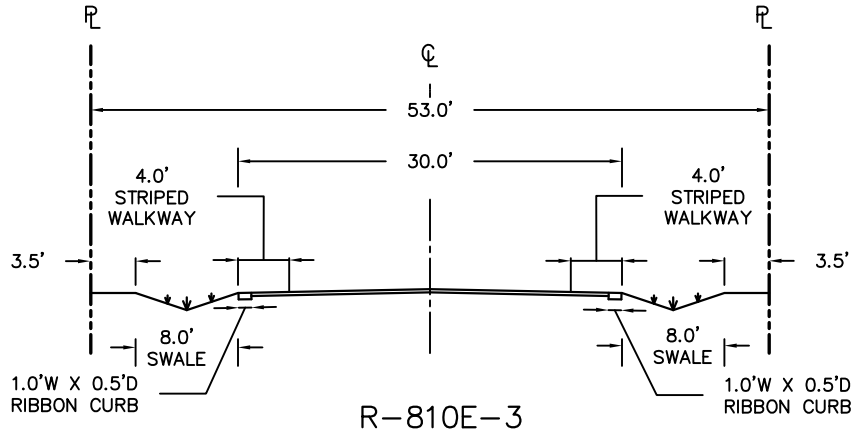

R–810E–3
N.T.S.
(RESIDENTIAL RS–1)

DATE: 5/1/2018	STANDARD STREET SECTIONS RESIDENTIAL	STANDARD DRAWING NO.	
SCALE: AS SHOWN		R-810 E	

H:\Drawings\City Standards\R–810 E.dwg

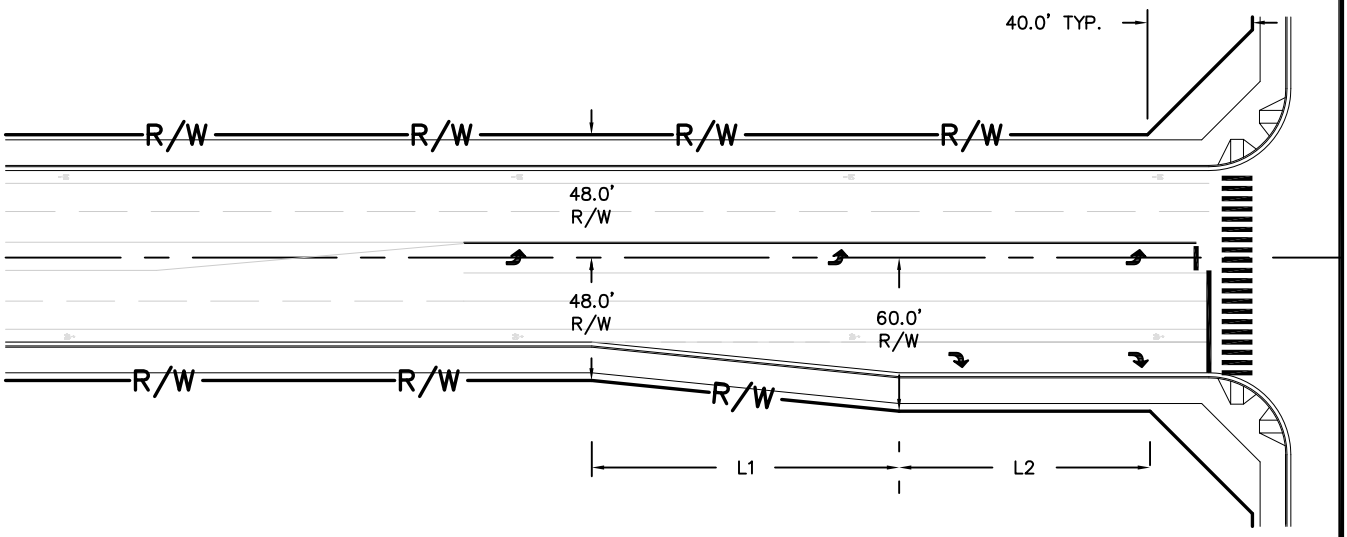

R-810F
N.T.S.
(PRINCIPAL ARTERIAL ROW FOR 6 LANES RT)

NOTE:
1. SEE TABLE BELOW FOR TAPER LENGTHS.
2. RT LANE WIDTH = 12.0'.
3. ADDITIONAL RIGHT-OF-WAY MAT BE REQUIRED AT THE DISCRETION OF THE CITY ENGINEER.

* TABLE TAKEN FROM POLICY ON GEOMETRICAL DESIGN OF HIGHWAYS AND STREETS (2011 EDITION TABLE 9-22) WITH ADDITIONAL INTERPOLATION

TAPER LENGTH TABLE		
SPEED (MPH)	L1 (FEET)	L2 (FEET)
20	72	48
25	72	48
30	72	48
35	96	74
40	120	115
45	120	180
50	180	205
55	180	310

CITY OF CALDWELL, IDAHO
More To Offer

DATE: 9/16/2015
SCALE: AS SHOWN

ROW WIDTHS/6 LANE RT
PRINCIPAL ARTERIAL

STANDARD DRAWING NO.
R-810 F

H:\Drawings\City Standards\R-810 F.dwg

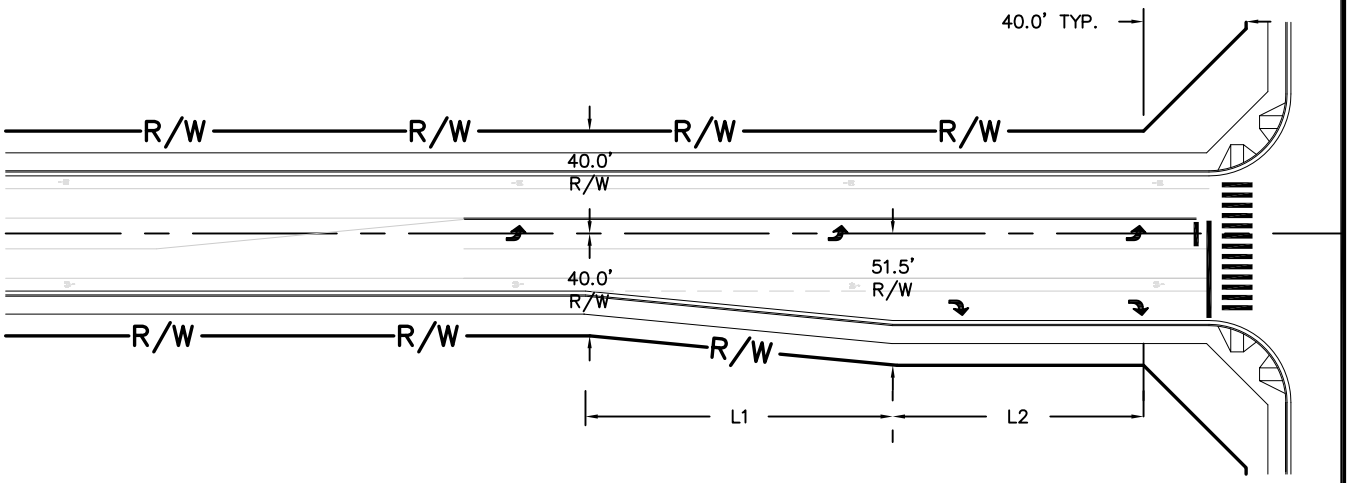

R-810G
N.T.S.
(MINOR ARTERIAL ROW FOR 4 LANES RT)

NOTE:
1. SEE TABLE BELOW FOR TAPER LENGTHS.
2. RT LANE WIDTH = 11.5'.
3. ADDITIONAL RIGHT-OF-WAY MAT BE REQUIRED AT THE DISCRETION OF THE CITY ENGINEER.

* TABLE TAKEN FROM POLICY ON GEOMETRICAL DESIGN OF HIGHWAYS AND STREETS (2011 EDITION TABLE 9-22) WITH ADDITIONAL INTERPOLATION

TAPER LENGTH TABLE		
SPEED (MPH)	L1 (FEET)	L2 (FEET)
20	72	48
25	72	48
30	72	48
35	96	74
40	120	115
45	120	180
50	180	205
55	180	310

CITY OF CALDWELL, IDAHO
More To Offer

DATE: 9/16/2015
SCALE: AS SHOWN

ROW WIDTHS/4 LANE RT
MINOR ARTERIAL

STANDARD DRAWING NO.
R-810 G

H:\Drawings\City Standards\R-810 G.dwg

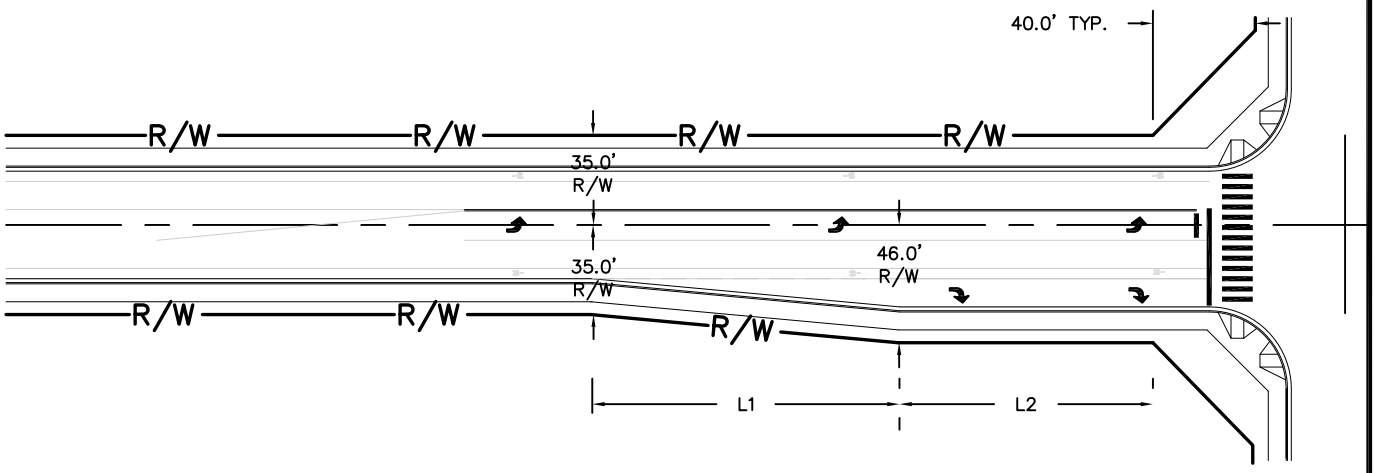

R-810H
N.T.S.
(COLLECTOR ROW FOR 4 LANES RT)

NOTE:
1. SEE TABLE BELOW FOR TAPER LENGTHS.
2. RT LANE WIDTH = 11.0'.
3. ADDITIONAL RIGHT-OF-WAY MAT BE REQUIRED AT THE DISCRETION OF THE CITY ENGINEER.

* TABLE TAKEN FROM POLICY ON GEOMETRICAL DESIGN OF HIGHWAYS AND STREETS (2011 EDITION TABLE 9-22) WITH ADDITIONAL INTERPOLATION

TAPER LENGTH TABLE		
SPEED (MPH)	L1 (FEET)	L2 (FEET)
20	72	48
25	72	48
30	72	48
35	96	74
40	120	115
45	120	180
50	180	205
55	180	310

DATE: 9/16/2015

SCALE: AS SHOWN

ROW WIDTHS/4 LANE RT
COLLECTOR

STANDARD DRAWING NO.
R-810 H

H:\Drawings\City Standards\R-810 H.dwg